Ordering Information:

Circuits	Part No. (Reflow tin, Light ivory color)	Dimension A	Dimension B
2	1501P0200T	1.5	4.5
3	1501P0300T	3.0	6.0
4	1501P0400T	4.5	7.5
5	1501P0500T	6.0	9.0
6	1501P0600T	7.5	10.5
7	1501P0700T	9.0	12.0
8	1501P0800T	10.5	13.5
9	1501P0900T	12.0	15.0
10	1501P1000T	13.5	16.5
11	1501P1100T	15.0	18.0
12	1501P1200T	16.5	19.5
13	1501P1300T	18.0	21.0

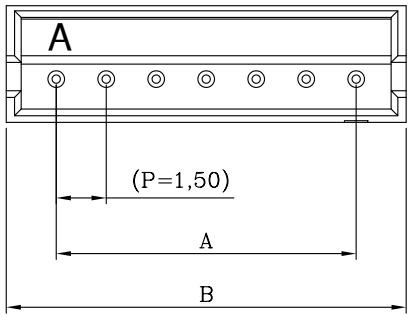

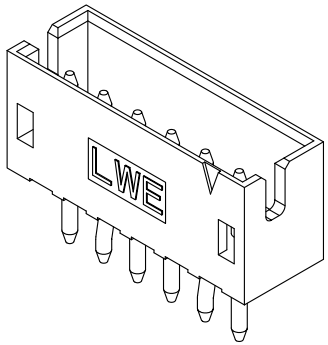

ISOMETRIC VIEW

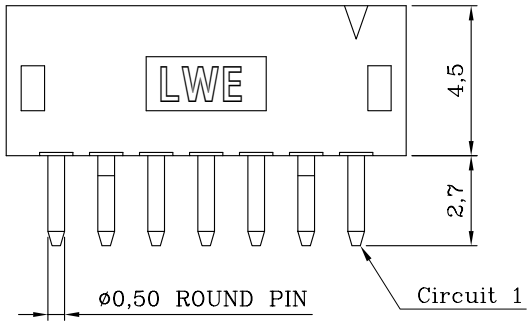

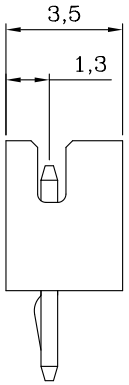

DESCRIPTION OF ORDER NO.:

1501P XX 0 0 X

- CIRCUITS NO. — XX
- TYPE NO. — 0
- PLATING NO. — X
  - T= REFLOW TIN-PLATED

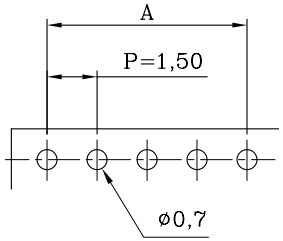

P.C. BOARD LAYOUT

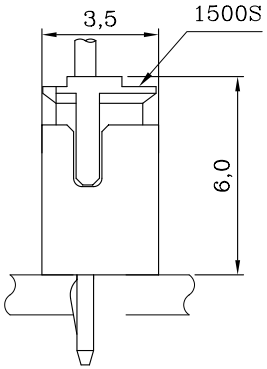

ASSEMBLY LAYOUT

NOTES:

1. MATERIAL:
   BASE: GLASS-FILLED NYLON66 94V-0,
   LIGHT IVORY COLOR(NATURAL)
   CONTACT PIN: BRASS
2. MATES WITH 1500S SINGLE-ROW SERIES PLUG HOUSING.
3. DESCRIPTION OF COLOR CODE:
   LEGEND: 1501PXX00X-X (-X: COLOR CODE)
   B=BLACK, C=COCONUT BROWN, E=BLUE, H=GRAY,
   I=BRICK RED, M=GREEN, R=RED, W=BROWN, S=NATURAL
4. REPLACEMENT OF HALOGEN-FREE PRODUCT:
   LEGEND: 1501PXX00X-XNH (NH: HALOGEN-FREE)
   LEGEND: 1501PXX00X-SNH (S=NATURAL COLOR)
5. INFORMATION IN THIS DRAWING IS NOT CONSIDERED AS FINAL.

RoHS Compliant REACH Compliant

Sales Drawing

MATERIAL: SEE NOTES
FINISH(COLOR): SEE NOTES

REV.	REVISION RECORD	DATE
W1	NEW RELEASE	31-DEC-14'

LANDWIN 聯盈電子股份有限公司
LANDWIN ELECTRONIC CORP.

GENERAL TOLERANCE:	PROJECTION	SCALE	UNIT	SHEET NO.	REV
		FREE	MM	1 / 1	W1

DRAWN R.G.
CHECKED J.L.Lin
APPD H.Y.Lin
ANGULAR ±3°
DATE 31-DEC-14'

DRAW NO. (CQ) 1501PXX00X

TITLE: 1.50 PITCH SINGLE-ROW STRAIGHT DIP-HEADER

THIS DRAWING CONTAINS INFORMATION THAT IS PROPRIETARY TO LANDWIN ELECTRONIC CORP. SHOULD NOT BE USED WITHOUT WRITTEN PERMISSION.