ORDER INFORMATION AND DIMENSION:

Circuits	Part No. (Matte tin, white color)	Dimension A	Dimension B
2	2071P02A3T	2.0	6.0
3	2071P03A3T	4.0	8.0
4	2071P04A3T	6.0	10.0
5	2071P05A3T	8.0	12.0
6	2071P06A3T	10.0	14.0
7	2071P07A3T	12.0	16.0
8	2071P08A3T	14.0	18.0
9	2071P09A3T	16.0	20.0
10	2071P10A3T	18.0	22.0
11	2071P11A3T	20.0	24.0
12	2071P12A3T	22.0	26.0
13	2071P13A3T	24.0	28.0
14	2071P14A3T	26.0	30.0
15	2071P15A3T	28.0	32.0
16	2071P16A3T	30.0	34.0

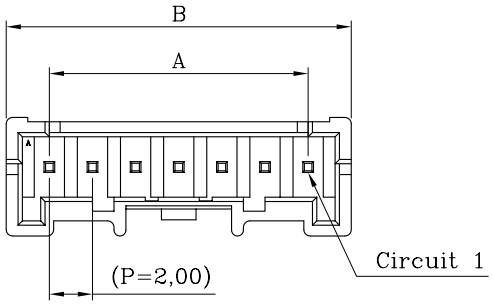

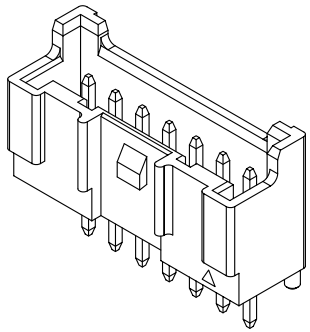

ISOMETRIC VIEW

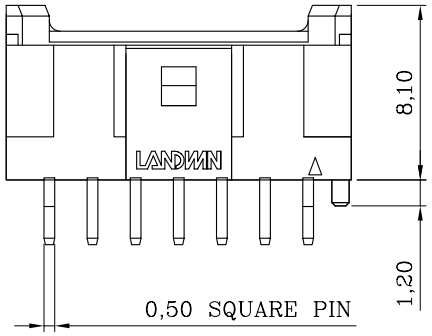

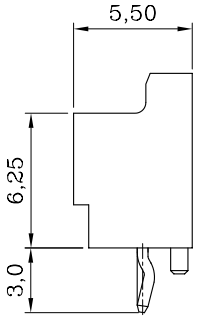

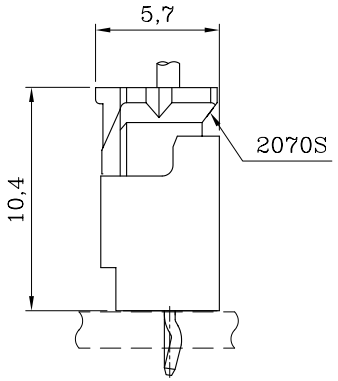

ASSEMBLY LAYOUT

DESCRIPTION OF ORDER NO.:

2071P XX A 3 X

- CIRCUITS NO. — XX
- TYPE NO. — A
- PLATING NO. — X

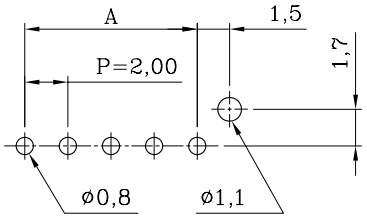

P.C. BOARD LAYOUT

NOTES:

1. MATERIAL:
   BASE: GLASS-FILLED P.B.T. 94V-0, WHITE COLOR (NATURAL)
   CONTACT PIN: BRASS
2. MATES WITH 2070S SINGLE-ROW PLUG HOUSING.
3. DESCRIPTION OF COLOR CODE:
   LEGEND: 2071PXXA3X-X (-X: COLOR CODE)
   B=BLACK, C=COCONUT BROWN, E=BLUE, H=GRAY,
   I=BRICK RED, M=GREEN, R=RED, W=BROWN
4. REPLACEMENT OF HALOGEN-FREE PRODUCT:
   LEGEND: 2071PXXA3X-XNH (NH: HALOGEN-FREE)
   LEGEND: 2071PXXA3X-SNH (S=NATURAL COLOR)

DESCRIPTION OF PLATING CODE			
T	MATTE TIN-PLATED	1	GOLD FLASH-PLATED

REV.	REVISION RECORD	DATE
W1	NEW RELEASE	31-DEC-14'

MATERIAL: SEE NOTES
FINISH(COLOR): SEE NOTES

RoHS Compliant REACH Compliant

Sales Drawing

LANDWIN 聯盈電子股份有限公司 LANDWIN ELECTRONIC CORP.

GENERAL TOLERANCE:	PROJECTION	SCALE	UNIT	SHEET NO.	REV
		FREE	MM	1 / 1	W1

DRAWN R.G.
CHECKED J.L.Lin
APPD H.Y.Lin
ANGULAR ±3°
DATE 31-DEC-14'

DRAW NO. (CQ) 2071PXXA3X

TITLE: 2.00 PITCH SINGLE-ROW STRAIGHT DIP-HEADER

THIS DRAWING CONTAINS INFORMATION THAT IS PROPRIETARY TO LANDWIN ELECTRONIC CORP. SHOULD NOT BE USED WITHOUT WRITTEN PERMISSION.