ORDER INFORMATION AND DIMENSION:

Circuits	Part No. (White color, T/P)	Dimension A	Dimension B
8	3061P08E3T-S1	27.72	31.68
9	3061P09E3T-S1	31.68	35.64
10	3061P10E3T-S1	35.64	39.60
11	3061P11E3T-S1	39.60	43.56
12	3061P12E3T-S1	43.56	47.52
13	3061P13E3T-S1	47.52	51.48
14	3061P14E3T-S1	51.48	55.44
15	3061P15E3T-S1	55.44	59.40

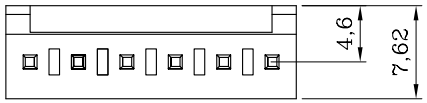

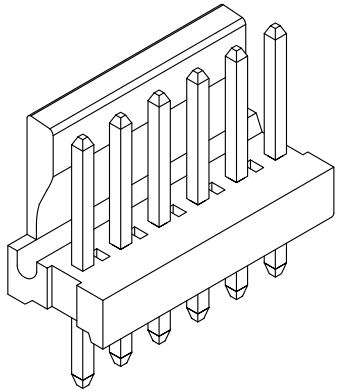

ISOMETRIC VIEW

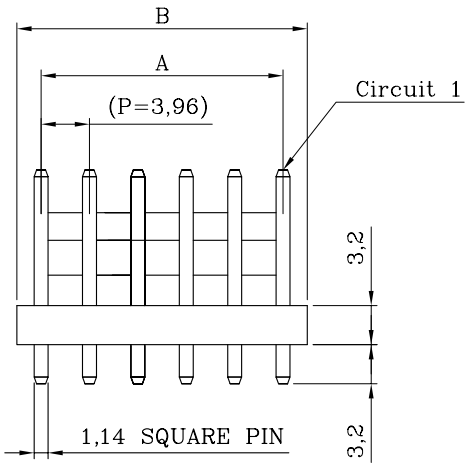

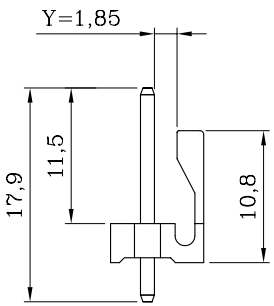

DESCRIPTION OF ORDER NO.:

3061P XX E 3 X - X 1

- CIRCUITS NO. — XX
- TYPE NO. — E
  - TYPE E-1 (Y=1.85)
- MATERIAL NO. — 3
  - 3= PBT PLASTICS
- PLATING NO. — X
- COLOR NO. — X

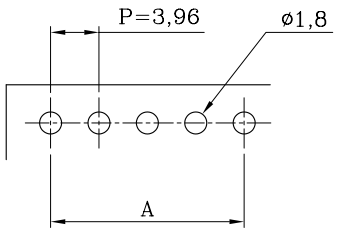

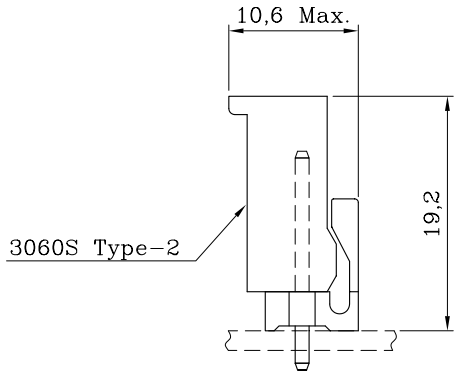

ASSEMBLY LAYOUT

NOTES:

1. MATERIAL:
   BASE: PBT-GF 94V-0, WHITE COLOR (NATURAL)
   CONTACT PIN: BRASS
2. MATES WITH 3360RXX22T-X SERIES IDC PLUG HOUSING.
3. DESCRIPTION OF COLOR NO:
   LEGEND: 3061PXXE3X-X1 (-X: COLOR CODE)
   B=BLACK, C=COCONUT BROWN, E=BLUE, H=GRAY,
   I=BRICK RED, M=GREEN, R=RED, W=BROWN
4. REPLACEMENT OF HALOGEN-FREE PRODUCT:
   LEGEND: 3061PXXE3X-X1NH (NH: HALOGEN-FREE)
   LEGEND: 3061PXXE3X-S1NH (S=WHITE COLOR)
5. INFORMATION IN THIS DRAWING IS NOT CONSIDERED AS FINAL.

P.C. BOARD LAYOUT
(COMPONENT SIDE)

DESCRIPTION OF PLATING NO:	
T= TIN-PLATED (T/P)	1= GOLD FLASH-PLATED
V= MATTE TIN-PLATED	

RoHS Compliant REACH Compliant

Sales Drawing

MATERIAL: SEE NOTES
FINISH(COLOR): SEE NOTES

LANDWIN 聯盈電子股份有限公司
LANDWIN ELECTRONIC CORP.

GENERAL TOLERANCE:	PROJECTION	SCALE	UNIT	SHEET NO.	REV
		FREE	MM	1 / 1	W1

DRAWN	R.G.
CHECKED	J.L.Lin
APPD	H.Y.Lin
DATE	31-DEC-14'
ANGULAR	±3°

DRAW NO. (CQ) 3061PXXE3X-X1

TITLE: 3.96 PITCH SINGLE-ROW S/T HEADER (TYPE E-1)

REV.	REVISION RECORD	DATE
W1	NEW RELEASE	31-DEC-14'

THIS DRAWING CONTAINS INFORMATION THAT IS PROPRIETARY TO LANDWIN ELECTRONIC CORP. SHOULD NOT BE USED WITHOUT WRITTEN PERMISSION.